Vision-Based Goalkeeper Robotic Arm Using Image Processing

Image Processing for Mechatronics (MCTR1010)

Mohamed Lotfy , Mazen Amr , Michael Hany , Youssef Elkholy , Besher Hezzeni , Mariam Ahmed

Assoc. Prof. Dr. Eng. Omar M. Shehata, Eng Dalia M. Mahfouz, PhD, Eng. Abdelrahman Hatem, MSc. And Eng. Mohammed Ashraf

Mechatronics Engineering Department, German University in Cairo, Cairo, Egypt

Abstract

This vision-based robotic goalkeeper uses a Raspberry Pi camera and OpenCV (HSV segmentation, contour detection, centroid extraction) to detect a moving ball and actuate a robotic arm in real time. The detected ball position is mapped to control commands sent to an Arduino, which drives a servo motor. The system shows high accuracy 92% and fast response 0.2 s.

Conclusion

The project successfully demonstrates a real-time vision-based robotic goalkeeper capable of detecting and tracking a ball and actuating a robotic arm accordingly. The system achieved reliable performance using classical image processing techniques on embedded hardware.

However, limitations such as sensitivity to lighting conditions, slight processing delay, and discrete motor movement were observed. Future improvements include implementing machine learning-based detection, smoother control strategies, and trajectory prediction.

Methodology

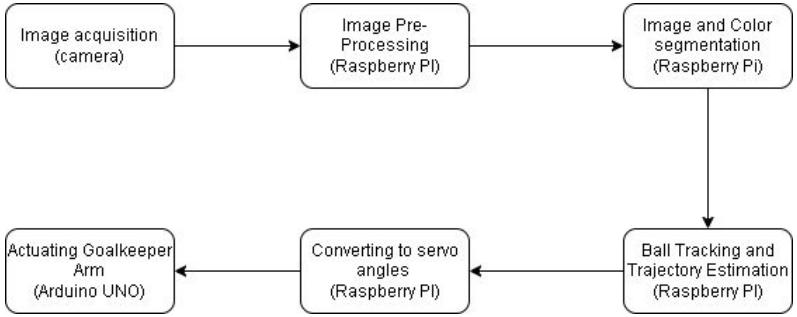

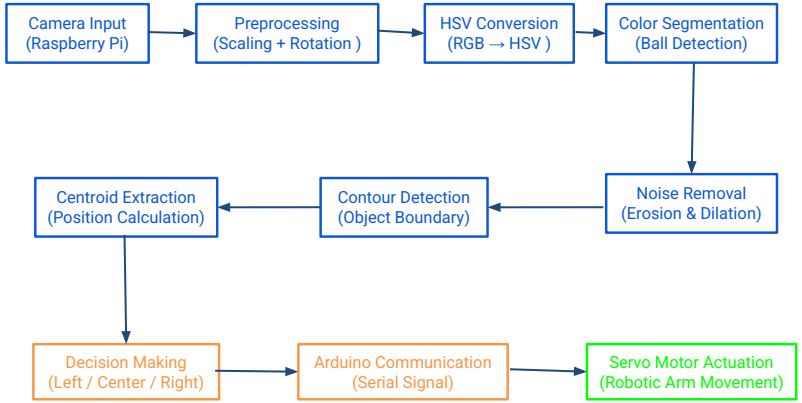
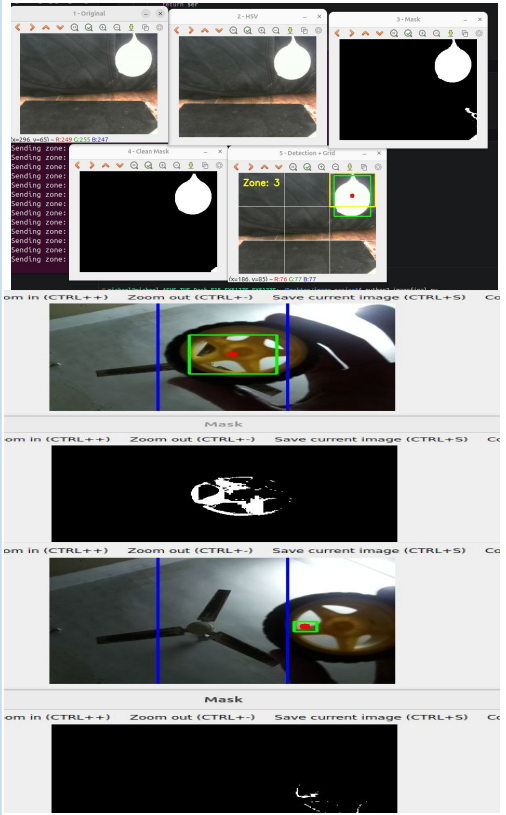
Results